ELECTRICAL ENGINEERING DEPARTMENT, BBDNIIT, LUCKNOW, 226028

“12 September, 2018”

A one day industrial tour to

Reliance Thermal Power Plant, Rosa

Shahjahanpur, Uttar-Pradesh.

OBECTIVE OF THE TRIP:

The main objective of this trip was to explore and study the Reliance Thermal power plant including its functioning, achievements and limitations.

Regarding our core branch (EE) it would have been very crucial and of utter importance to dive into the core industries and this power plant had been a successful path towards vast exploration of the opportunities in the industry.

CO-ORDINATING FACULTIES:

1. Mr. Pradeep Verma (Associate Professor, EE department)
2. Ms. Kitty Tripathi (Associate Professor, EE department)
3. Mr. Raghvendra Pratap Singh (Assistant professor EE department)

Introduction of site: - Rosa Thermal Power Plant is a 1,200-megawatt (MW) coal-fired power station at Rosa village in shahjahapur, Uttar Pradesh, India, which is owned and operated by Reliance Power.

Rosa Power Supply Company Limited (RPSCL), the holding company of Rosa Power Plant, was incorporated on September 1, 1994 as a subsidiary of Aditya Birla Power Company. It was later transferred to Reliance Power on November 1, 2006 and is now a fully owned subsidiary of Reliance Power. It is a project that has received a considerable support from the Uttar Pradesh government with it being designated a 'priority project'. The entire power generated will be sold to Uttar Pradesh Power Corporation Limited (UPPCL). The tariff for the power generated by the plant will be determined in accordance with the guidelines for tariff as set by Uttar Pradesh Electricity Regulatory Commission.

BLOCK DIAGRAM AND OVERVIEW OF THE THERMAL POWER PLANT…….

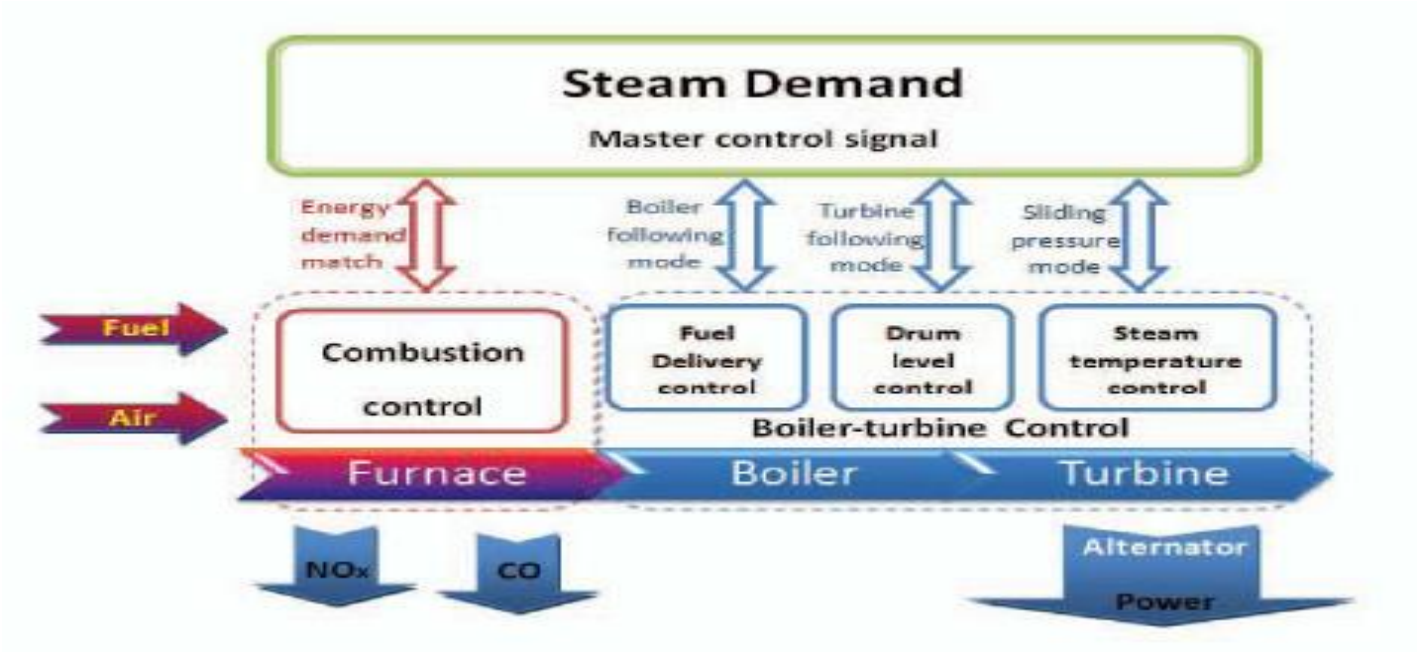

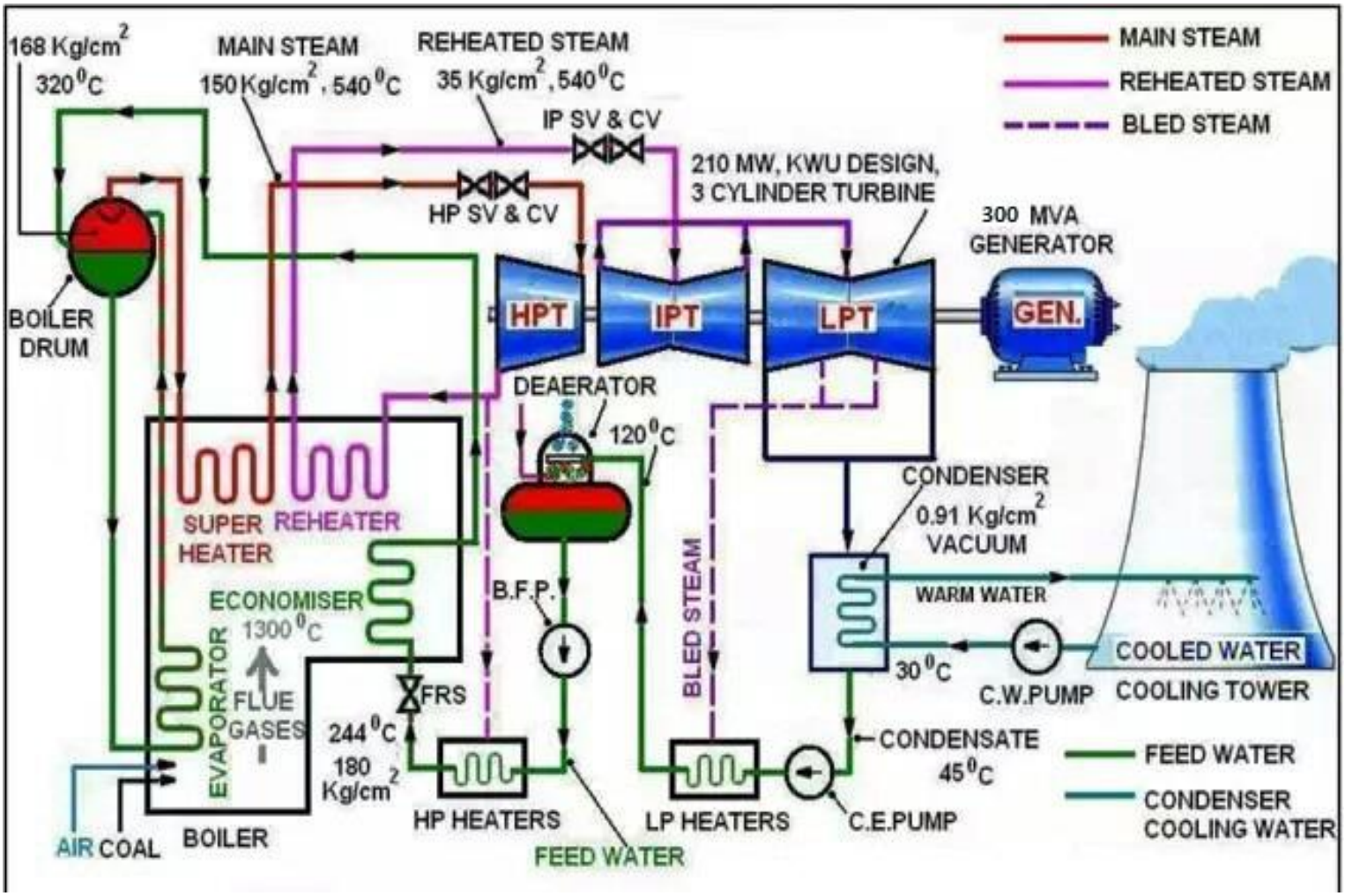

MAIN ELEMENTS OF POWER GENERATION PROCESS

1. COAL AND ITS PROCESSING
2. BOILER SYSTEMS AND STEAM GENERATION
3. GENERATION SECTION
4. POLLUTION CONTROL AND DISTRIBUTION

COAL AND ITS PROCESSING.

Coal will be supplied from the Ashoka Coal mines of Central Coalfields Limited (CCL), a subsidiary of Coal India Limited (CIL). The coal mines are located in Jharkhand and the coal will be transported by Railways over a distance of 870 kms. Water for the power station "will be sourced from Garrah river located a kilometer from the project."

Total amount of coal requires for the proper functioning if the plant on daily basis was app. 17280 tonnes of coal, which is equivalent to 5 freight trains having 55-60 wagons full of coal in each train.

Bituminous coal (in pulverizes form) was used in this power plant for generation of heat energy

The temperature of the exhaust gases which was released in to the ambient is app 105 °C.

FLOW CHART OF COAL PROCESSING AT RELIANCE THERMAL PLANT

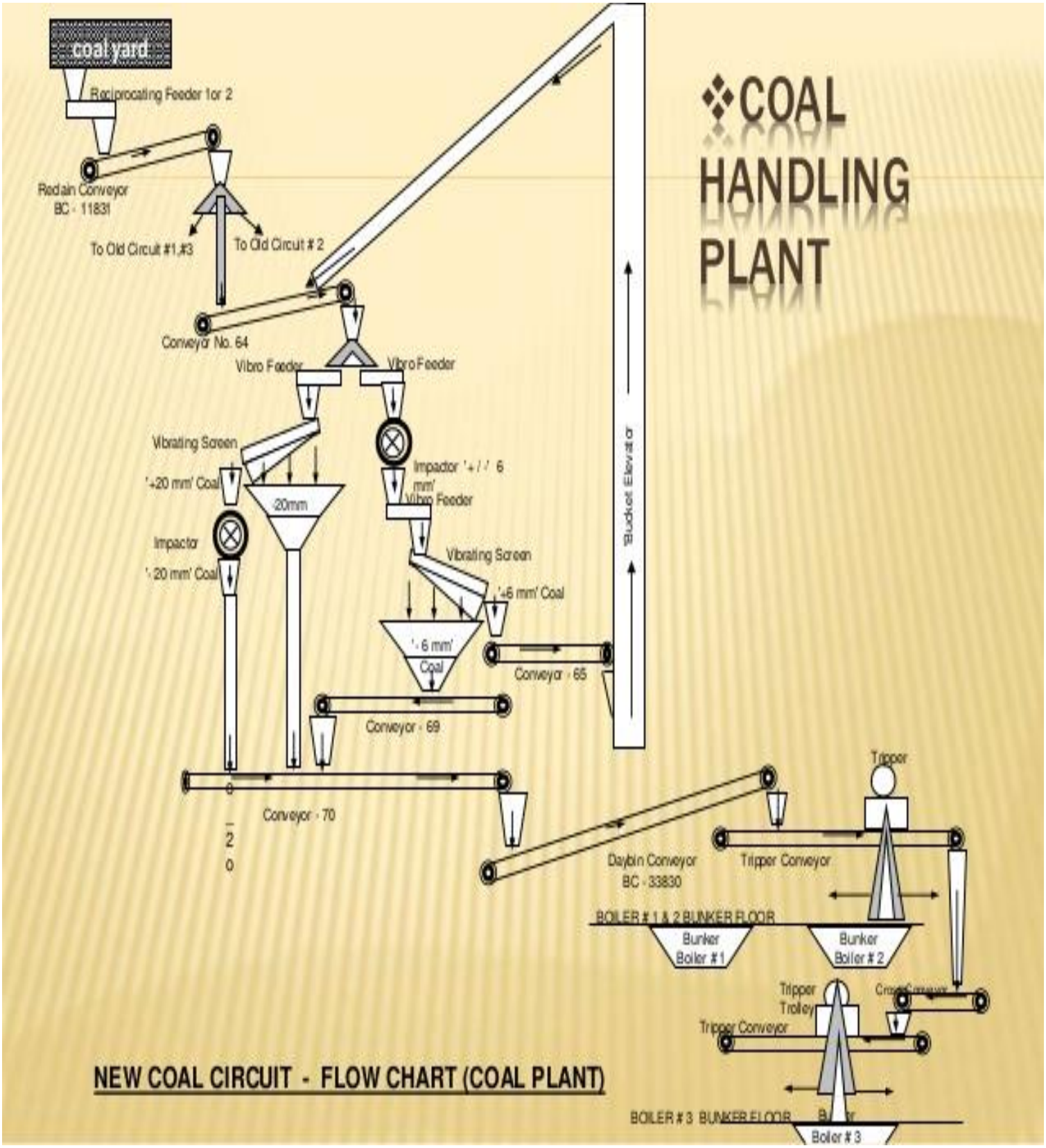

BOILER SYSTEMS AND STEAM GENERATION

The boiler which in function at the Rosa power plant was a fire tube boiler in which the water was in the pipes and fire was around and outside the pipes.

The temperature of the boiler was app. 1300 ℃ inside. The height of the boiler was app. 75 mtrs. The powder form if coal was pumped into the boiler from all the four sided of the boiler though a pipe with the help of pumps.

GENERATION SECTION

The turbine generator consists of a series of steam turbines interconnected to each other and a generator on a common shaft. There is usually a high-pressure turbine at one end, followed by an intermediate-pressure turbine, and finally one, two, or three low-pressure turbines, and the generator. As steam moves through the system and loses pressure and thermal energy, it expands in volume, requiring increasing diameter and longer blades at each succeeding stage to extract the remaining energy. The entire rotating mass may be over 200 metric tons and 100 feet (30 m) long. It is so heavy that it must be kept turning slowly even when shut down (at 3 rpm) so that the shaft will not bow even slightly and become unbalanced.

The generator, typically about 30 feet (9 m) long and 12 feet (3.7 m) in diameter, contains a stationary stator and a spinning rotor, each containing miles of heavy copper conductor. There is generally no permanent magnet, thus preventing black starts. In operation it generates up to 21,000 amperes at 24,000 volts AC(504 MWe) as it spins at either 3,000, synchronized to the power grid. The rotor spins in a sealed chamber cooled with hydrogen gas, selected because it has the highest known heat transfer coefficient of any gas and for its low viscosity, which reduces windage losses. This system requires special handling during startup, with air in the chamber first displaced by carbon dioxide before filling with hydrogen. This ensures that a highly explosive hydrogen–oxygen environment is not created.

Some other facts regarding pollution control and distribution…

1. The ESP(Electrostatic Precipitator) which was used to extract the pollutants from the exhaust gases was highly efficient. It's efficiency was 99%.

2. The major and only customer of this power generated is Uttar Pradesh Power Corporation Limited (UPPCL).

3. There were two types of ash generated. The lighter ones were collected in a hopper by the were collected from the ESP were sold to the cement favorites for using it in making cement.

4. The steam which was produced to run the turbine falls on the blade with very high pressure (approx.:167 kg per square cm)

Special Thanks

Special thanks to the Hon'ble:

Director of BBDNIIT Dr. V. K. Singh, Plant officer Mr. Sunil Ranjan Singh & Mr. Pushpendra and all the respected faculty members of Electrical & Electronics Engineering branch

……